T 5 S.R.4&5W.W.M.

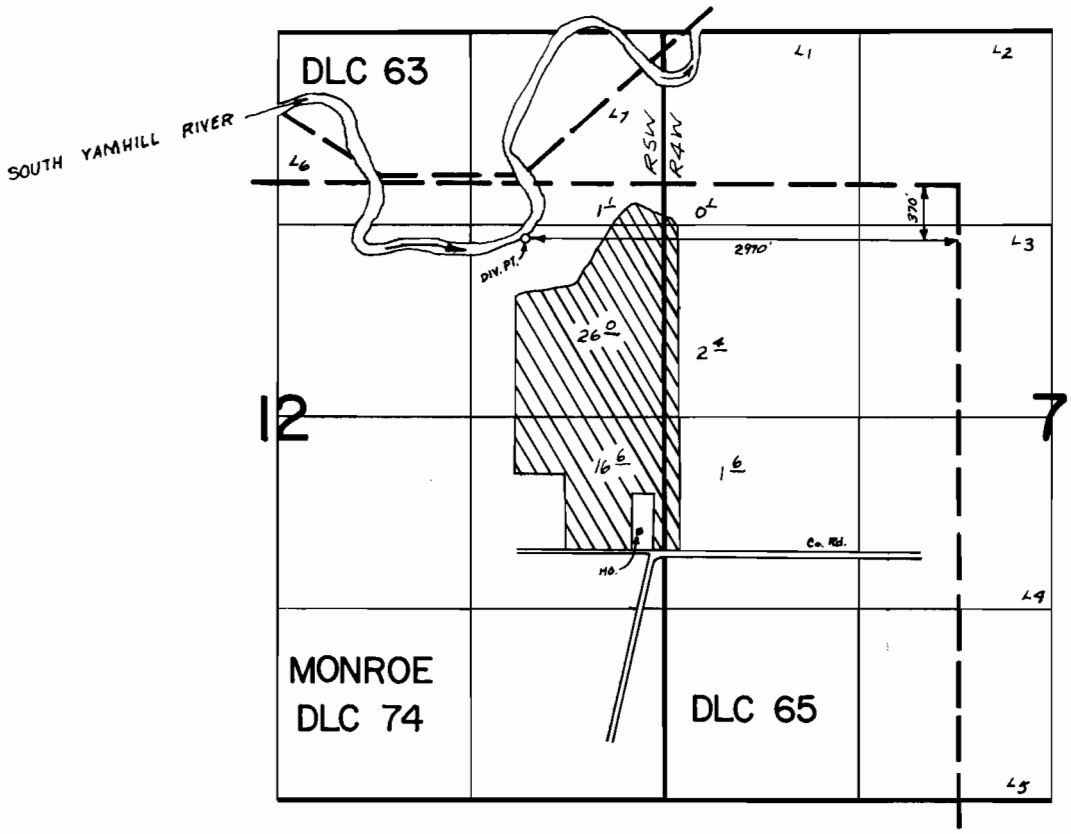

FINAL PROOF SURVEY
UNDER

Application No. 41827 Permit No. 31306
IN NAME OF

JOHN W. CRAWFORD

Surveyed JUN 1 19 73, by R.G. MUCKEN

DFQ-1LL-106 RC