T.38&39S.,R.41E.,W.M.

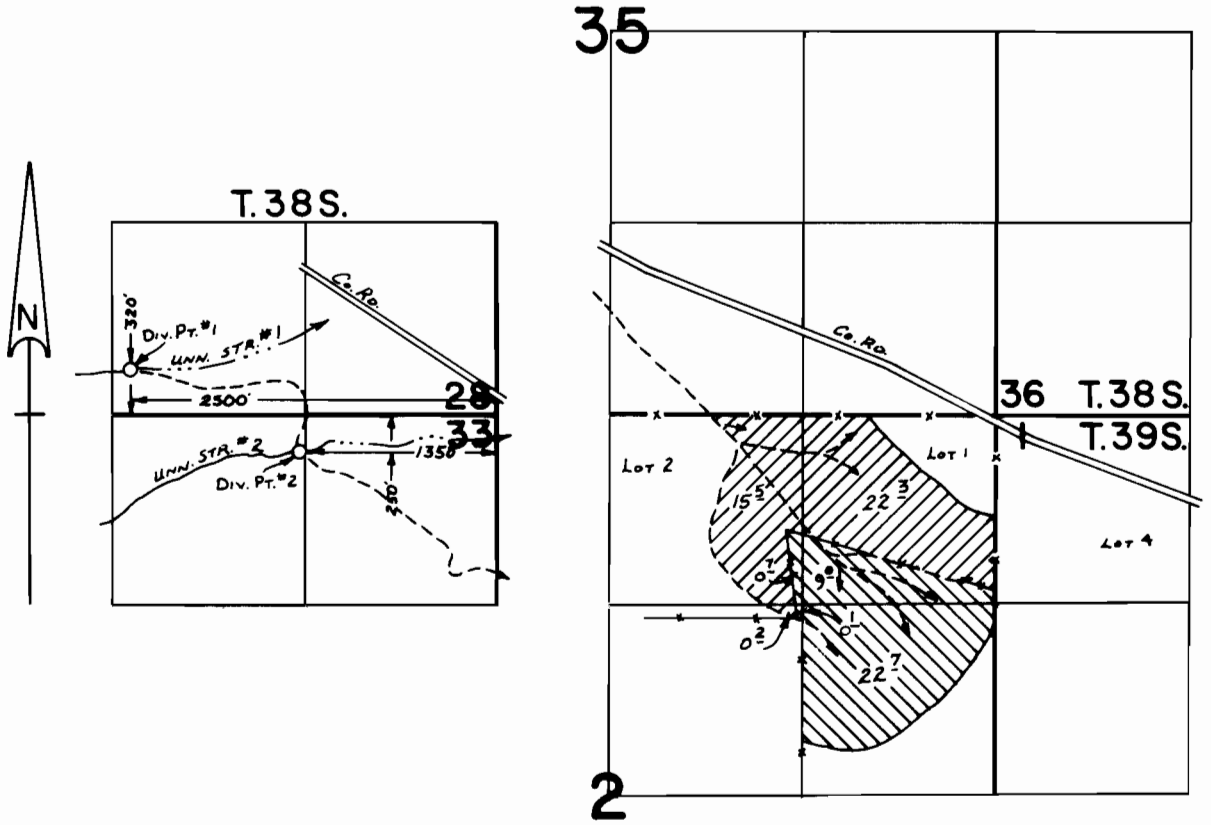

SCALE: 1" = 1320'

- Primary
- Supplemental

FINAL PROOF SURVEY

UNDER

Application No. 53749 Permit No. 40364

IN NAME OF

DAVID & AVELINA I. ETCHART

Surveyed July 24 19.85, by L. M. TOLL

41045-178-248L