T.15S.R.42E.WM

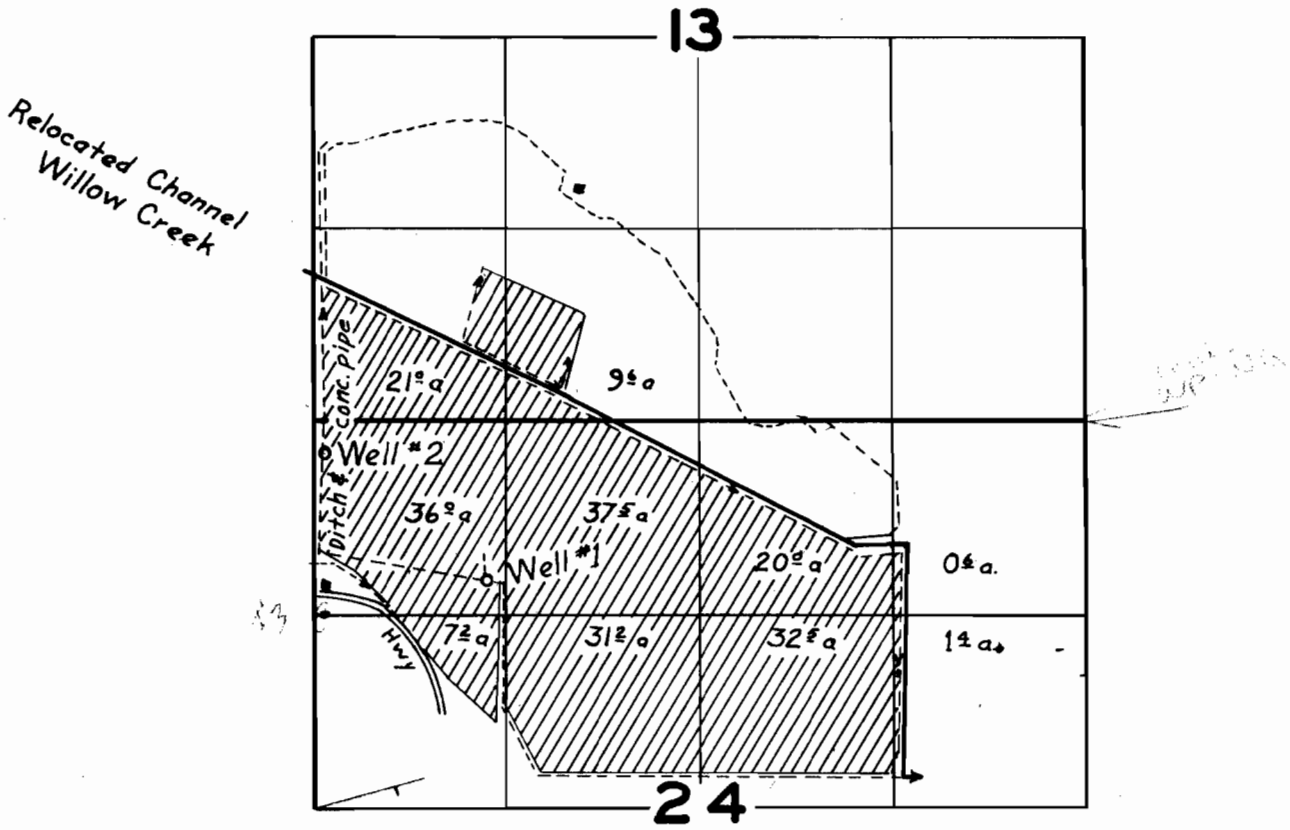

FINAL PROOF SURVEY

UNDER

Application No. U-204 **Permit No.** U-185

IN NAME OF

The Tomasell Company

Surveyed July 22 1953, **by** H.L.Coffman

1953-3