T. 1 S., R. 8 W., W.M.

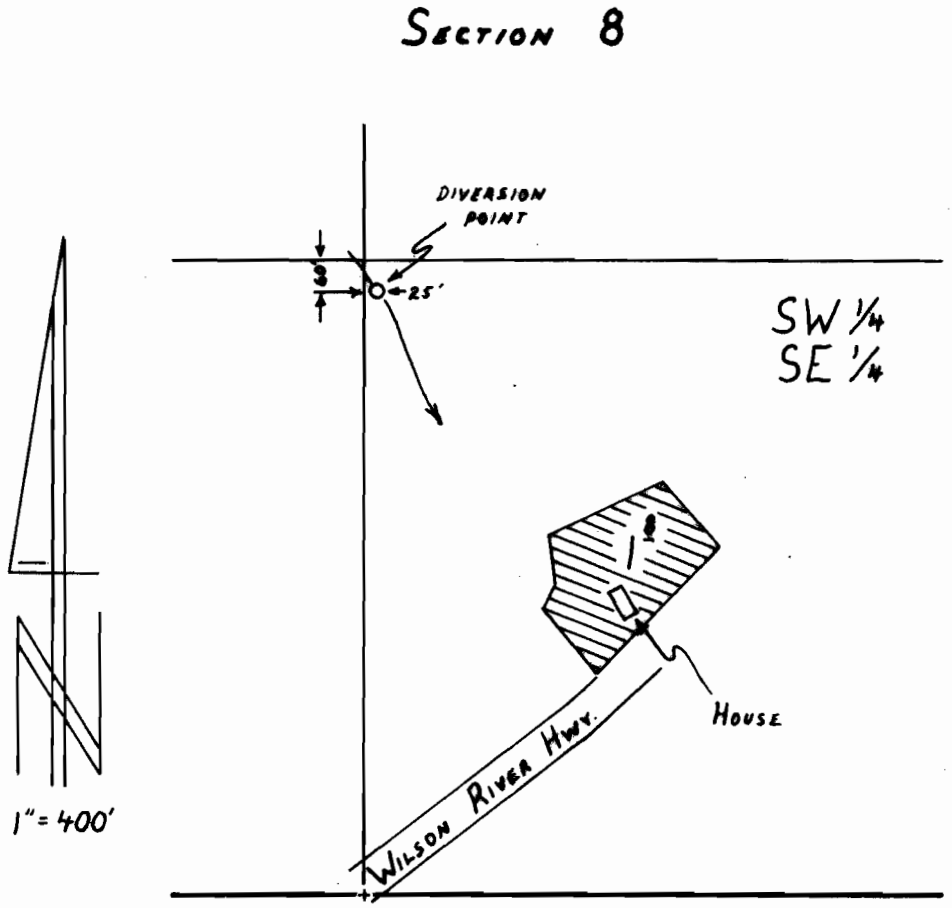

FINAL PROOF SURVEY

UNDER

Application No. 65086 Permit No. 47811

IN NAME OF

RONALD E. & THERESA M. KRAKE

Surveyed SEPTEMBER 22, 1992, by R.W. Klassen

PTS W/FF RWK 4/93