T 23 S, R 31 E, WM

RECEIVED
NOV 21 1995
WATER RESOURCES DEPT
SALEM, OREGON

RECEIVED
WATER RESOURCES DEPT
SALEM, OREGON

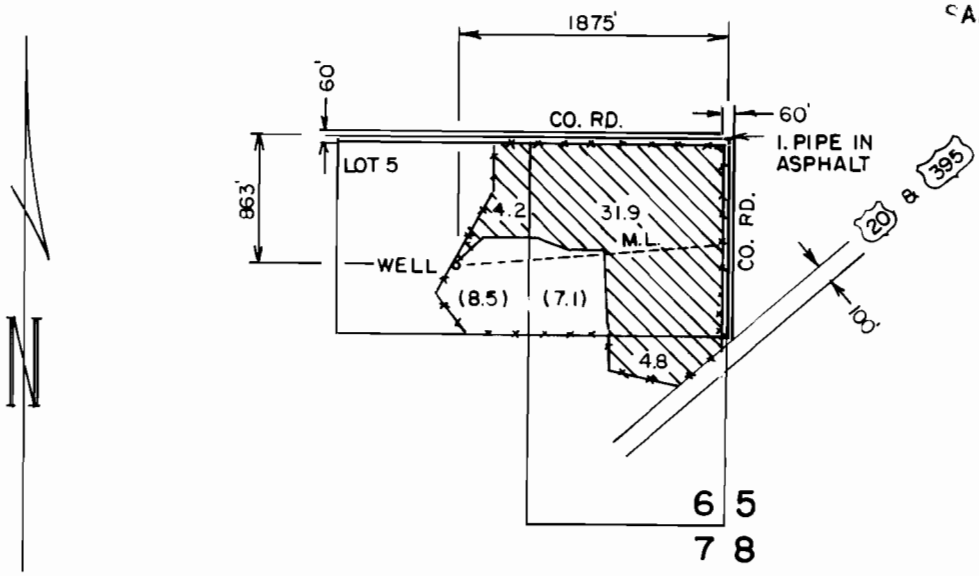

( ) DENOTES AREA BEING IRRIGATED UNDER CERT. NO. 50983

THE PURPOSE OF THIS MAP IS TO IDENTIFY THE [illegible] OF THE W[illegible] T[illegible] E[illegible] THE [illegible] OF PROPERTY OWNERSHIP.

FINAL PROOF SURVEY

UNDER
APPLICATION NO. G-12453
PERMIT NO. G-11424

IN THE NAME OF
JEAN SCRIVNER

SCALE: 4" = 1 MILE
JO 1294-95

4-8-96 REVISED TITLE BLOCK PER W.R.D.

Certified Water Right Examiner
#100
Chris T. Palmer
Nov. 19, 1987
STATE OF OREGON