# TRANSFER MAP TO ACCOMPANY APPLICATION TO TEMPORARILY CHANGE PLACE OF USE & ADD A POINT OF APPROPRIATION FOR J.R. SIMPLOT SELF-DECLARATION OF REVOCABLE TRUST

1011602

*"FROM" TAX LOT 500*
*IN SECTIONS 7, 8, 17, AND 18, TOWNSHIP 33 SOUTH, RANGE 19 EAST, W.M.*
*LAKE COUNTY, OREGON*

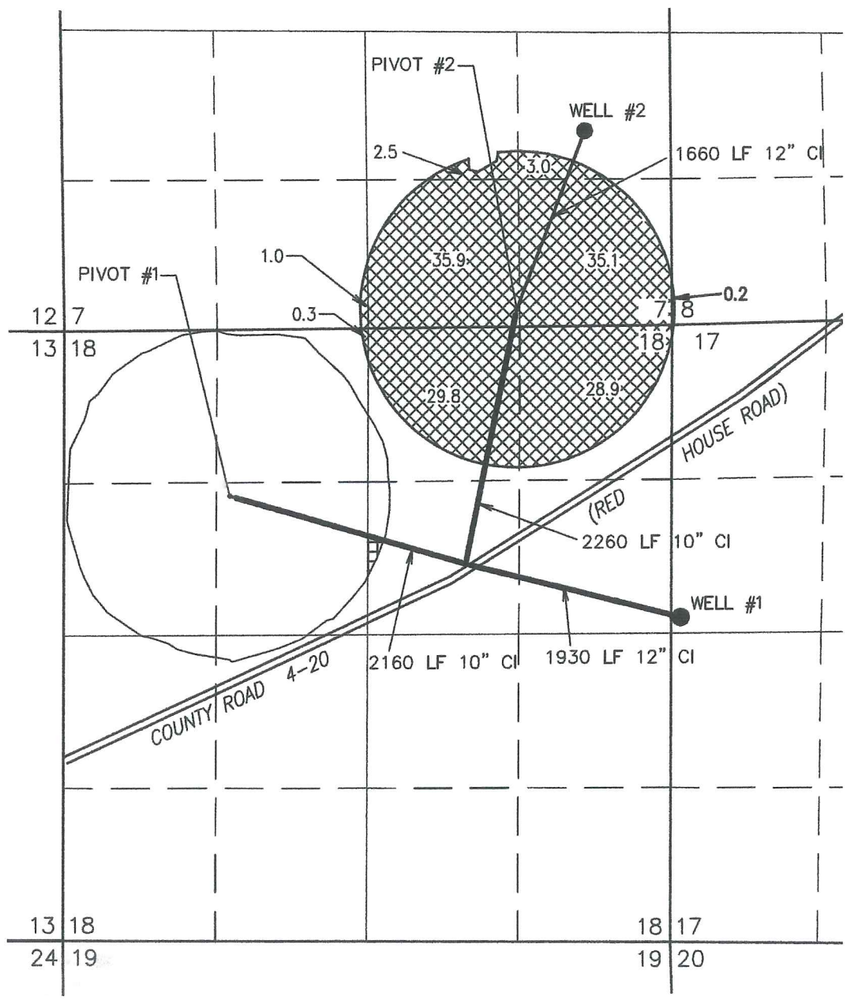

- *WELL#1 (LAKE 1667–G13505) IN THE SW 1/4 NW 1/4 SECTION 17, T33S R19E, W.M. LOCATED 2600 FEET SOUTH AND 50 FEET EAST FROM THE NW CORNER OF SECTION 17.*
- *WELL#2 (LAKE 51182–G13505) IN THE NE 1/4 SE 1/4 SECTION 7, T33S R19E, W.M. LOCATED 1690 FEET SOUTH AND 770 FEET WEST FROM THE SE CORNER OF SECTION 7.*
- *WELL#7 (LAKE xxxxx PROPOSED) IN THE NE 1/4 NW 1/4 SECTION 23, T34S R19E, W.M. LOCATED 170 FEET SOUTH AND 3000 FEET WEST FROM THE NE CORNER OF SECTION 23.*

*136.7 ACRES PRIMARY GROUND WATER RIGHTS FROM CERTIFICATE #86190 (G–13505) TRANSFERRED AS SHOWN.*

*THIS MAP IS FOR THE PURPOSE OF LOCATING A WATER RIGHT ONLY AND HAS NO INTENT TO PROVIDE LEGAL DIMENSIONS OR THE LOCATION OF PROPERTY LINES.*

*"TO" TAX LOT 200*
*IN SECTIONS 14 & 23, TOWNSHIP 34 SOUTH, RANGE 19 EAST, W.M.*
*LAKE COUNTY, OREGON*

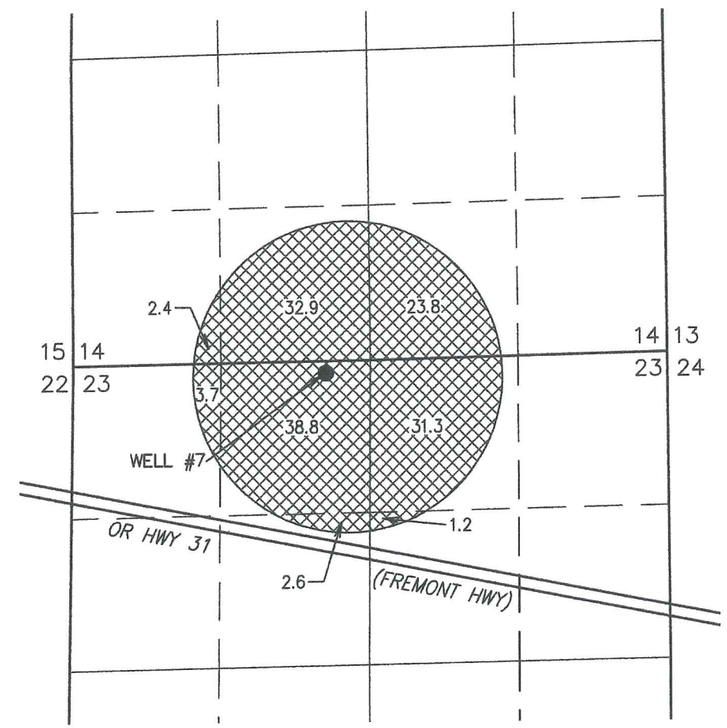


RECEIVED BY OWRD
MAY 21 2013
SALEM, OR

Certified Water Right Examiner #51324
Scott Montgomery
May 21, 2001
STATE OF OREGON
RENEWAL DATE: 12/31/2014


ALL POINTS ENGINEERING & SURVEYING, INC.
P.O. BOX 767 (CRR)
TERREBONNE, OREGON 97760
(541) 548-5833 PH
(541) 585-4602 FX
www.APEandS.com


PROJECT No. 13-003

PREPARED AT THE REQUEST OF:
J.R. SIMPLOT SELF-DECLARATION OF REVOCABLE TRUST
P.O. BOX 27
BOISE, ID 83707