CLAIM OF BENEFICIAL USE MAP

TO ADD A POINT OF APPROPRIATION PER TRANSFER, T-14279 FOR SCOTT & JOSE TOBIASSON

TOWNSHIP 25 SOUTH, RANGE 15 EAST, SECTION 33, W.M.
TAX LOT: 1800

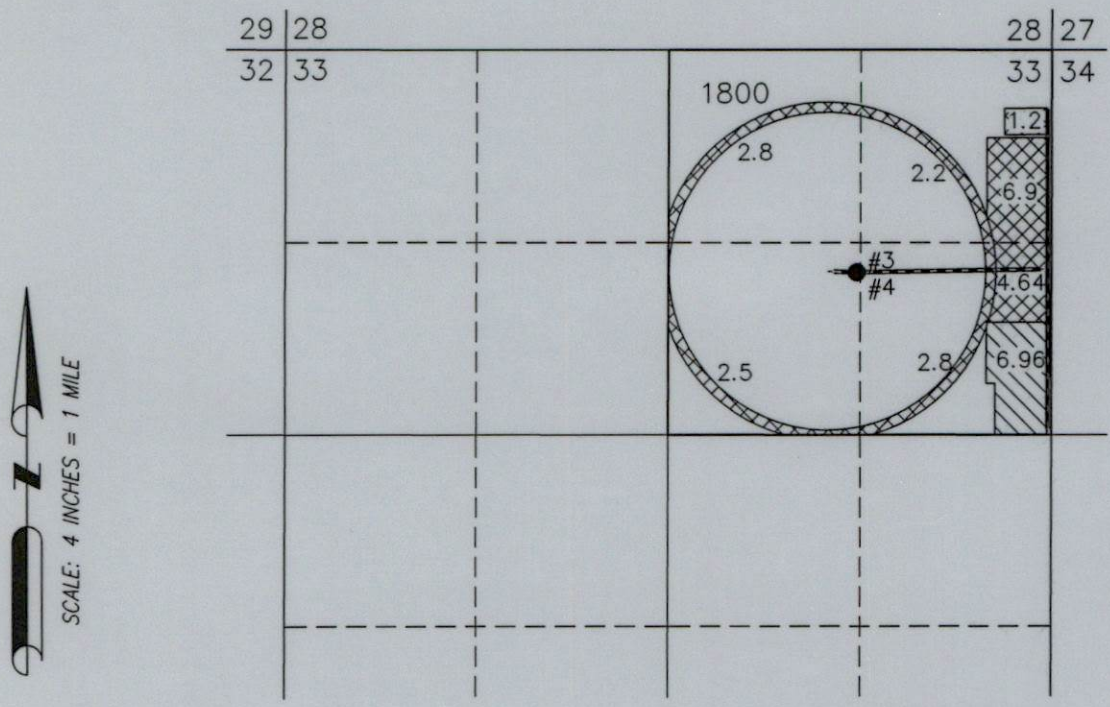

Received
SEP 26 2025
OWRD

BURIED CONVEYANCE

23.04 ACRES IR AUTHORIZED FROM #3 & #4 BY T-14279.

6.96 ACRES IR AUTHORIZED FROM #3 & #4 BY T-14279.

- #3 (LAKE 188)
  LOCATED IN THE SW 1/4 NE 1/4 SECTION 33, T25S R15E, W.M. AND 1120 FEET NORTH AND 1350 FEET WEST FROM THE E 1/4 CORNER OF SECTION 33.

  FLOW METER IS LOCATED ON THE DELIVERY PIPE 5 FEET EAST FROM THE WELL.

- #4 (LAKE 53360)
  LOCATED IN THE SW 1/4 NE 1/4 SECTION 33, T25S R15E, W.M. AND 1108 FEET NORTH AND 1350 FEET WEST FROM THE E 1/4 CORNER OF SECTION 33.

  FLOW METER IS LOCATED ON THE CENTER PIVOT SPRINKLER & 200 FEET WEST FROM THE WELL.

Certified Water Right Examiner
#51324 WRE
Scott D. Montgomery
May 21, 2001
STATE OF OREGON

RENEWAL DATE: 12/31/2026

THIS MAP IS FOR THE PURPOSE OF LOCATING A WATER RIGHT ONLY AND HAS NO INTENT TO PROVIDE LEGAL DIMENSIONS OR THE LOCATION OF PROPERTY LINES.

PREPARED FOR:

SCOTT TOBIASSON
P.O. BOX 93
FT. ROCK, OR 97735

PREPARED BY:

ALL POINTS ENGINEERING AND SURVEYING, INC.
P.O. BOX 767 TERREBONNE, OR 97760
(541) 548-5833 www.APEandS.com